Dimension drawing

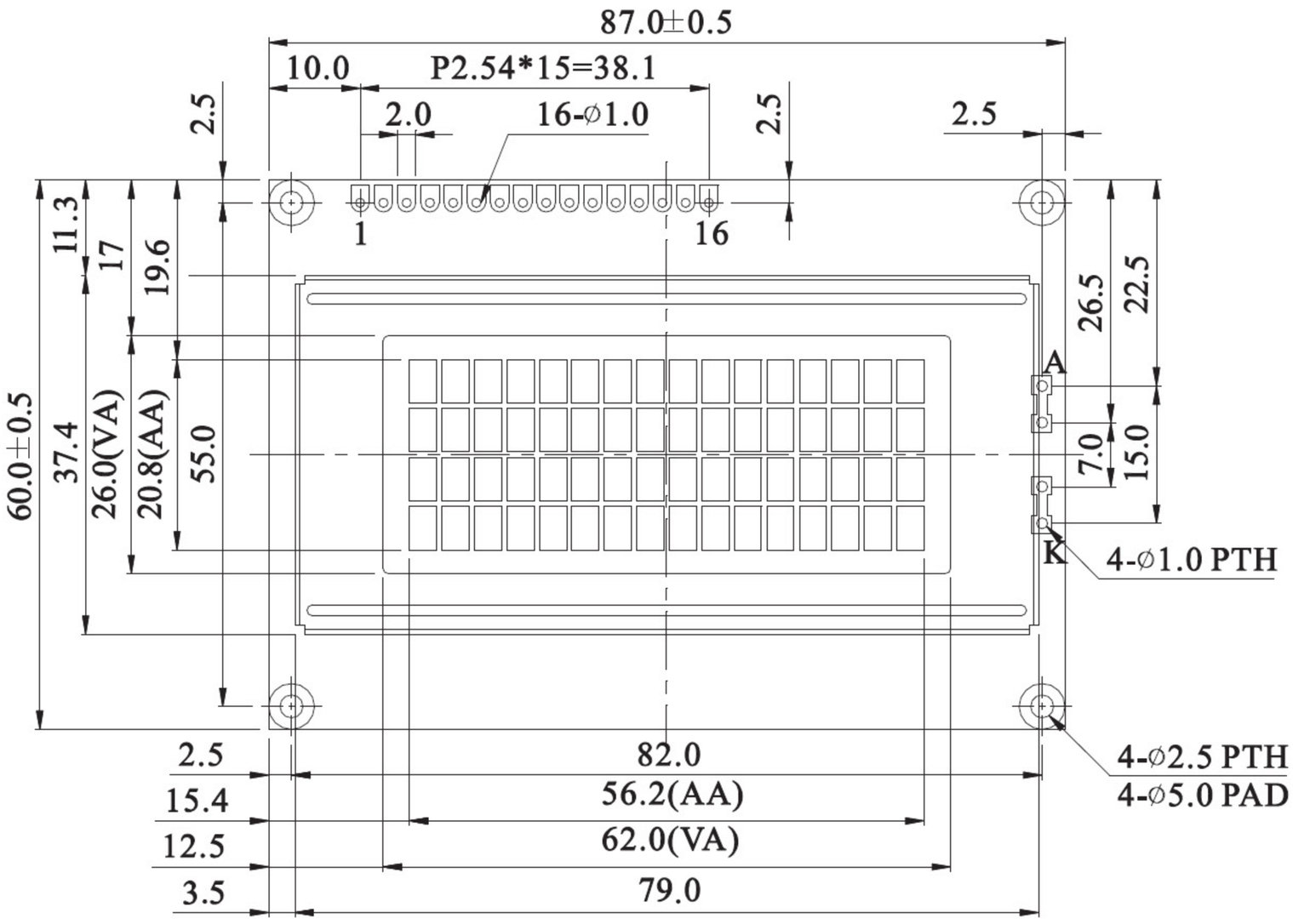

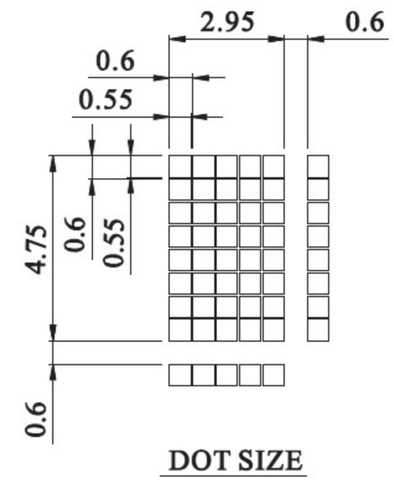

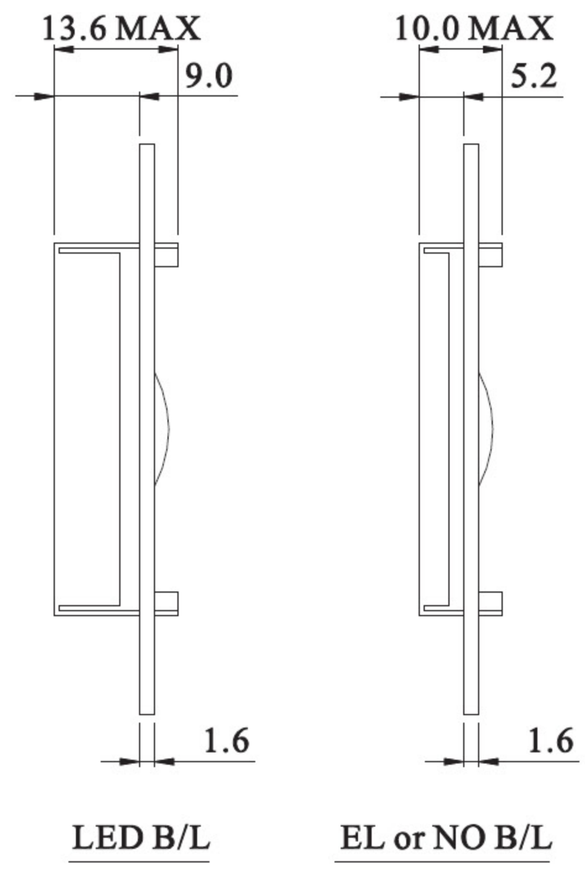

Feature

1. 5x8 dots includes cursor
2. Built-in controller (KS 0066 or Equivalent)
3. +5V power supply (Also available for +3V)
4. 1/16 duty cycle
5. LED can be driven by pin1,pin2,pin15,pin16 or A and K
6. N.V. optional for +3V power supply

Pin NO.	Symbol	Function
1	Vss	GND
2	Vdd	+3V or + 5V
3	Vo	Contrast Adjustment
4	RS	H/L Register select signal
5	R/$\overline{W}$	H/L Read / write signal
6	E	H→L Enable signal
7	DB0	H/L Data bus line
8	DB1	H/L Data bus line
9	DB2	H/L Data bus line
10	DB3	H/L Data bus line
11	DB4	H/L Data bus line
12	DB5	H/L Data bus line
13	DB6	H/L Data bus line
14	DB7	H/L Data bus line
15	A/Vee	+4.2V for LED(RA=0Ω)/Negative Voltage output
16	K	Power supply for B/L (0V)

Mechanical Data

Item	Standard Value	Unit
Module Dimension	87.0x60.0	mm
Viewing Area	62.0x26.0	mm
Mounting hole	82.0x55.0	mm
Character Size	2.95x4.75	mm

Absolute Maximum Rating

Item	Symbol	Standard Value			Unit
		min.	typ.	max.	
Power Supply	VDD-VSS	-0.3	---	7.0	V
Input Voltage	VI	-0.3	---	VDD	V

Note：VSS=0 Volt, VDD=5.0 Volt.

Electronical Characteristics

Item	Symbol	Condition	Standard Value			Unit
			min.	typ.	max.	
Input Voltage	VDD	VDD=+5V	4.7	5.0	5.3	V
Supply Current		VDD= +3V	2.7	3.0	5.3	V
Recommended LC Driving Voltage for Normal Temp. Version module	IDD	VDD=5 V	---	1.0	1.2	mA
	VDD-V0	-20°C	5.0	5.1	5.7	V
		0°C	4.6	4.8	5.2	
		25°C	4.1	4.5	4.7	
		50°C	3.9	4.2	4.5	
		70°C	3.7	3.9	4.3	
LED Forward Voltage	VF	25°C	---	4.2	4.6	V
LED Forward Current	IF	25°C	---	220	440	mA
EL Power Supply Current	IEL	Vel=110VAC;400Hz	---	---	5.0	mA

Display Character Address Code：

Display position	1	2	3	4	5	6	7	8	9	10	11	12	13	14	15	16
DD RAM Address	00	01														0F
DD RAM Address	40	41														4F
DD RAM Address	10	11														1F
DD RAM Address	50	51														5F